Splice Closure WTC05

POLE/WALL MOUNTING BRACKET WTC0.5

Aginode Ref: 10085489

The LINX WTC Splice case product range is designed for enclosing buried, underground, and overhead cable splices.

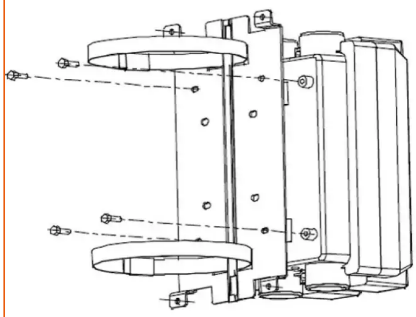

Watertight Closure for Fibre Optic Cables

- 2 Cable ports,
- Re-enterable, fully mechanical watertight system,
- IP68 and pressurizable,
- Capacity : 4 splice trays, 48 splices,
- Multi-cable sealing system (up to 12 cables per port).

Cabling configuration :

- 1 Standard port per side, each allowing up to 12 cables.

Splice management :

Four plastic splice trays allows to store and identify up to 48 Heat-Shrink splices. Plastic combs for buffer tubes and pig-tails retention are moulded in each tray.

Grounding :

- Standard grounding assures electrical continuity between all cable ports (individual cable grounding is also available)

Cable anchoring :

- WTC05 is compatible with the Aginode cable clamp range. 3 points cable clamps for extremely high cable retention, or simplified 1 point anchoring systems are available.

All configurations are modular and allow easy upgrades.

STANDARDS

Aginode specification

All drawings, designs, specifications, plans and particulars of weights, size and dimensions contained in the technical or commercial documentation of Aginode is indicative only and shall not be binding on Aginode or be treated as constituting a representation on the part of Aginode.

The main functions are :

- to protect splices and bare fibers from the environment and unwanted handlers,
- to efficiently and easily store, manage and identify FO splices and fibers.

Conception

Sealing system :

- Fully mechanical sealing system for reduced installation and re-entry time.

The top shell, sealed with a gasket, can be easily installed and removed without special tools or torque control.

- Cable sealing devices based on a mechanical compression system : this allows to re-use all components for future upgrades or re-access to the closure.

(No tape, glue, heat-shrink tubes, or cable jacket preparation is needed).

Product usage

Sealing system

- Fully mechanical sealing system for reduced installation and re-entry time.
  The top shell, sealed with a gasket, can be easily installed and removed without special tools or torque control.
- Cable sealing devices based on a mechanical compression system: this allows to re-use all
  components for future upgrades or re-access to the closure. (No tape, glue, heat-shrink tubes, or cable jacket preparation is needed).
  The mechanical sealing system perfectly fits cables blowing technology.

Grounding

Standard grounding assures electrical continuity between all cable ports (an external grounding plug is also available).

Splice management

Four plastic splice trays allows to store and identify up to 48 Heat-Shrink splices. Plastic combs for buffer tubes and pigtails

All drawings, designs, specifications, plans and particulars of weights, size and dimensions contained in the technical or commercial documentation of Aginode is indicative only and shall not be binding on Aginode or be treated as constituting a representation on the part of Aginode.

retention are integrated in each tray.

Cabling clamping

WTC0,5 is compatible with the Aginode clamping device range which includes 3 points cable clamps for extremely high cable retention, or simplified 1 point anchoring systems for cables and tubes.

Characteristics

Material	**External:**Thermoplastic closure shell ; Stainless Steel screws **Internal:** Polycarbonate splice trays (V0 - 1.5mm); Zamac or Stainless Steel cable clamp; Stainless Steel trays chassis
Splice capacity	• Up to 48 Heat-Shrink splices • 4 Splice trays including moulded plastic combs for buffer tubes and pigtails
Cable ports	*See the Sealing product range datasheet for the number and diameter of cable*
Cabling configurations	Straight splicing
Sealing system	**Top shell**: mechanical sealing (6 Stainless Steel screws – no torque control) **Cable ports:** WTC mechanical sealing system (elastomer compression)
Grounding	• Grounding of all metal components inside the closure. • External grounding plug for hearth connection.
Dimensions	**L:** 342mm ;**L':** 398mm ; **W:** 110mm ; **H:** 121.5mm ;**I:** 245.9mm

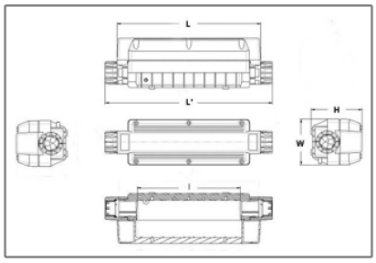

文件

Instruction manual pdf — 103.78 KB 下载

销售和交付信息

WTC 05

All drawings, designs, specifications, plans and particulars of weights, size and dimensions contained in the technical or commercial documentation of Aginode is indicative only and shall not be binding on Aginode or be treated as constituting a representation on the part of Aginode.