Cabinet accessories

KIT OF 10 PLASTIC RINGS 1U

Aginode Ref: 10267871

Additionnal rings for 19'' modules with fixing directly on square hole of the the rack with 1/4 turn.

Accessories for management of optical fibre cables and patchcords and also for fixation of cabinets.

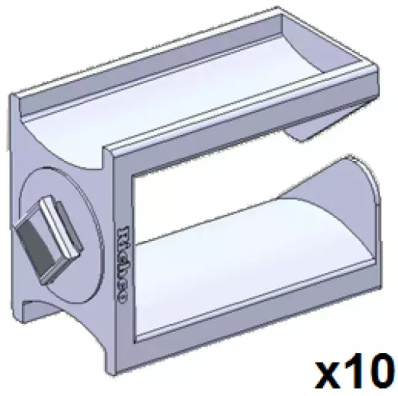

STANDARDS

Aginode specification

All drawings, designs, specifications, plans and particulars of weights, size and dimensions contained in the technical or commercial documentation of Aginode is indicative only and shall not be binding on Aginode or be treated as constituting a representation on the part of Aginode.