Cabinet accessories

CEILING FIXING KIT

Aginode Ref: 10267828

Kit with 4 adjustable arms (min 310mm, max 560mm) to fix a cabinet or a set on the ceiling with 4 screws (not provided)

Accessories for management of optical fibre cables and patchcords and also for fixation of cabinets.

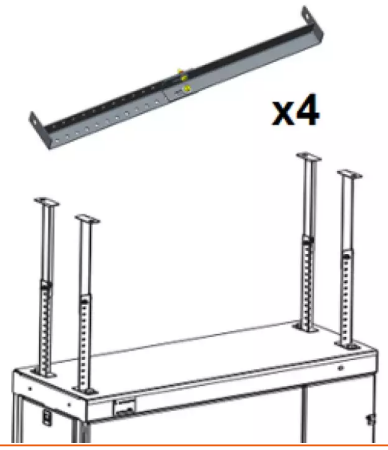

STANDARDS

Aginode specification

All drawings, designs, specifications, plans and particulars of weights, size and dimensions contained in the technical or commercial documentation of Aginode is indicative only and shall not be binding on Aginode or be treated as constituting a representation on the part of Aginode.