Mechanical closure / WTC1.5

POLE/WALL MOUNTING BRACKET WTC1.5

Aginode Ref: 10075111

The mounting bracket for WTC1.5 allows a closure to be mounted on a wall or pole. Hardware to secure the closure on the bracket is included (metallic stripes for pole mounting optional)

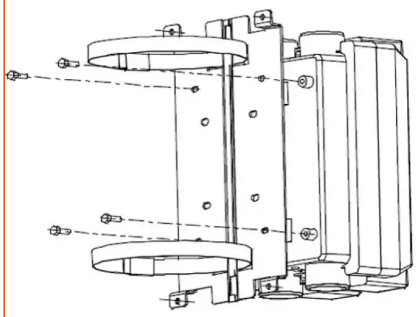

The WTC Splice closure product range is designed for enclosing buried, underground, and overhead cable splices.

Main functions

- protect splices and bare fibers from the environment and unwanted handlers
- efficiently and easily store, manage and identify FO splices and fibres.

STANDARDS

Aginode specification

Product usage

Sealing system

- Fully mechanical sealing system for reduced installation and re-entry time.
- The top shell, sealed with a gasket, can be easily installed and removed without special tools or torque control.
- Cable sealing devices based on a mechanical compression system: this allows re-using all components for future upgrades or re-accessing to the closure. (No tape, glue, heat-shrink tubes, or cable jacket preparation is needed).

Cable clamping

3 points cable clamps for extremely high cable retention, or simplified 1 point clamping systems are available.

Grounding

Standard grounding assures electrical continuity between all cable ports (an external grounding plug is also available)

Fibre management

Several fibre management solutions and configurations are available for loose tube, tight buffer or ribbon cable storage

All drawings, designs, specifications, plans and particulars of weights, size and dimensions contained in the technical or commercial documentation of Aginode is indicative only and shall not be binding on Aginode or be treated as constituting a representation on the part of Aginode.

and management:

- Standard splice trays
- FiberArt
- Splitter splice tray

All configurations are modular and easy upgradable.

Cabling configuration

- Standard
- Butt Mid-span

Characteristics

Material	Thermoplastic closure shell
Maximum Splice capacity	**Depending of the application and the type of splice tray:** • Up to 72 Heat-shrink splice protections, organized in 6 standard splice trays • Up to 96 Heat-shrink splice protections and 8 splitters 1x8 (8 splitter splice trays) • Up to 144 Heat shrink splice protection, 12 splice trays *All splice trays are compatible with G652D fibre (minimum bending radius of 30mm)*
Cable ports	• 4 Standard port **or** • 2 Standard port + 2 butt mid-span ports *See the Sealing product range datasheet for the number and diameter of cables*
Degrees of protection	IP68 (500 mbar flash test) IK10
Sealing system	**Top shell**: mechanical sealing (8 screws – no torque control) **Cable ports:** mechanical sealing (elastomer compression system)
Operating temperature	-35 / +70°C
Splice supports	Heat-shrink, ANT, Focs, 3M, and mass splice protections
Dimensions	**L** 357 mm x **W** 191 mm x **H** 147 mm

Diagram

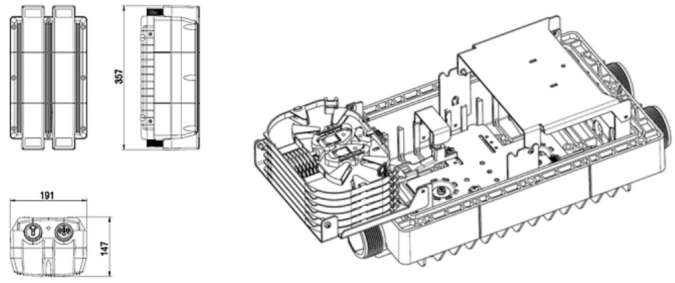

Versions

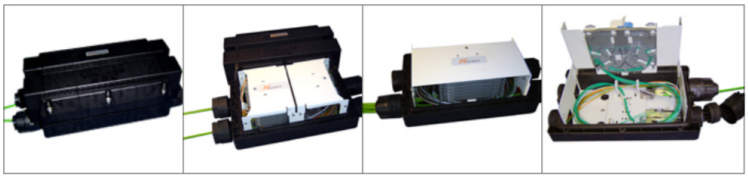

WTC1.5 Closure | WTC 1.5 with the 144 optical fibre organizer | WTC1.5 with the 72 optical fibre organizer (Splitter splice trays) | WTC1.5 with a splitter splice tray and SC adaptors on the top of the organizer

All drawings, designs, specifications, plans and particulars of weights, size and dimensions contained in the technical or commercial documentation of Aginode is indicative only and shall not be binding on Aginode or be treated as constituting a representation on the part of Aginode.

Pole/Wall mounting bracket WTC1.5

Characteristics

Dimensional characteristics	
Height	15 mm
Width	176 mm
Length	370 mm

Documentation

Instruction manual pdf — 103.78 KB Download

All drawings, designs, specifications, plans and particulars of weights, size and dimensions contained in the technical or commercial documentation of Aginode is indicative only and shall not be binding on Aginode or be treated as constituting a representation on the part of Aginode.