Cabinet accessories

Accessories for management of optical fibre cables and patchcords and also for fixation of cabinets.

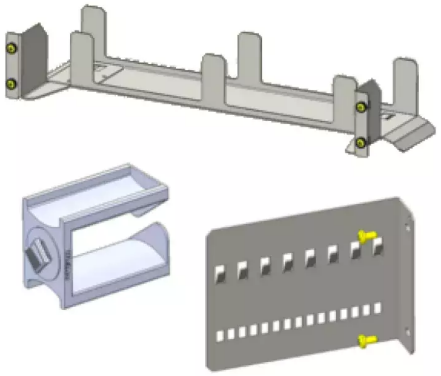

STANDARDS

Aginode specification

All drawings, designs, specifications, plans and particulars of weights, size and dimensions contained in the technical or commercial documentation of Aginode is indicative only and shall not be binding on Aginode or be treated as constituting a representation on the part of Aginode.

Product list

	Aginode ref.	Country ref.	이름
	10267872	-	Wall fixing kit
	10243523	-	Ground fixing kit
	10267828	-	Ceiling fixing kit
	10266406	-	Coupling kit for 2 sets on front
	10267410	-	Fixing kit side by side
	10266985	-	Fixing kit back to back
	10267790	-	Side clamping kit for right side
	10267791	-	Side clamping kit for left side
	10267792	-	Side fixing plate for DEP or BAEP
	10264256	-	Back fixing plate for DEP or BAEP
	10267789	-	Kit with 6 side coiling rings
	10267834	-	Horizontal cable way height 2U
	10267871	-	Kit of 10 plastic rings 1U

= Make to order, = In Stock

All drawings, designs, specifications, plans and particulars of weights, size and dimensions contained in the technical or commercial documentation of Aginode is indicative only and shall not be binding on Aginode or be treated as constituting a representation on the part of Aginode.