Mechanische Muffe - WTC05

SUPPORT DE MONTAGE POTEAU/MURAL WTC0.5

Aginode Ref: 10085489

Spleißmuffe WTC05

- 2 Kabelanschlüsse
- Mehrfach zugängliches, vollmechanisches, wasserdichtes System
- Mehrfachkabel-Dichtungssystem (bis zu 24 Kabel pro Anschluss)
- IP68 und Druckbeaufschlagung möglich
- Kapazität: 4 Spleißablagen, 48 Spleiße
- Gerades Spleißen oder stumpfe Midspan-Konfiguration

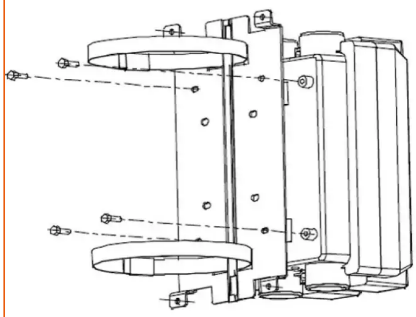

STANDARDS

Aginode specification

Anwendung

Das Produktsortiment LINX WTC-Spleißgehäuse ist für die Kapselung von erdverlegten, unterirdischen und oberirdischen Kabelspleißen vorgesehen.

Die Hauptfunktionen sind:

- Schutz von Spleißen und blanken Glasfasern vor Umwelteinflüssen und unbefugtem Zugriff
- Effiziente und einfache Ablage, Handhabung und Identifizierung von LWL-Spleißen und -Fasern

Product usage

Sealing system

- Fully mechanical sealing system for reduced installation and re-entry time.
  The top shell, sealed with a gasket, can be easily installed and removed without special tools or torque control.
- Cable sealing devices based on a mechanical compression system: this allows to re-use all
  components for future upgrades or re-access to the closure. (No tape, glue, heat-shrink tubes, or cable jacket preparation is needed).
  The mechanical sealing system perfectly fits cables blowing technology.

Grounding

All drawings, designs, specifications, plans and particulars of weights, size and dimensions contained in the technical or commercial documentation of Aginode is indicative only and shall not be binding on Aginode or be treated as constituting a representation on the part of Aginode.

Standard grounding assures electrical continuity between all cable ports (an external grounding plug is also available).

Splice management

Four plastic splice trays allows to store and identify up to 48 Heat-Shrink splices. Plastic combs for buffer tubes and pigtails retention are integrated in each tray.

Cabling clamping

WTC0,5 is compatible with the Aginode clamping device range which includes 3 points cable clamps for extremely high cable retention, or simplified 1 point anchoring systems for cables and tubes.

Characteristics

Material	**External:**Thermoplastic closure shell ; Stainless Steel screws **Internal:** Polycarbonate splice trays (V0 - 1.5mm); Zamac or Stainless Steel cable clamp; Stainless Steel trays chassis
Splice capacity	• Up to 48 Heat-Shrink splices • 4 Splice trays including moulded plastic combs for buffer tubes and pigtails
Cable ports	*See the Sealing product range datasheet for the number and diameter of cable*
Cabling configurations	Straight splicing
Sealing system	**Top shell**: mechanical sealing (6 Stainless Steel screws – no torque control) **Cable ports:** WTC mechanical sealing system (elastomer compression)
Grounding	• Grounding of all metal components inside the closure. • External grounding plug for hearth connection.
Dimensions	**L:** 342mm ;**L':** 398mm ; **W:** 110mm ; **H:** 121.5mm ;**I:** 245.9mm

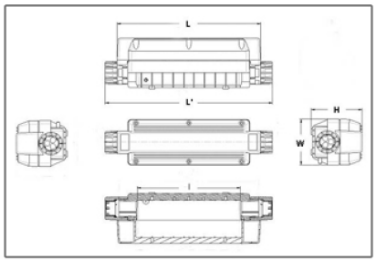

Dokumentation

Instruction manual pdf — 103.78 KB Herunterladen

All drawings, designs, specifications, plans and particulars of weights, size and dimensions contained in the technical or commercial documentation of Aginode is indicative only and shall not be binding on Aginode or be treated as constituting a representation on the part of Aginode.