Single skin cabinets

PME SP ALUMINIUM CABINET 19'' 22U 1350X750X350

Aginode Ref: 10237793

Outdoor aluminium cabinet sizes (mm) 1350x750x350 equipped with 19'' rack capacity 22U.





Outdoor single skin metallic cabinets are a well-adapted solution for cross-connect cabinet. They are optimized for street use for configurations point to point or PON with integration of splitters.

Compared to other outdoor cabinets solutions, outdoor single skin metallic cabinets are the best alternative between price and customization. Design is adapted to as well in 1 door than in 2 doors configurations (without central pillar) so with full access. These cabinets are available in steel or aluminium painted for high resistance to corrosion and reduction of weight.

Outdoor single skin metallic cabinets are equipped with 1 or 2 racks with format 19'' compatible with all types of optical modules (swiveling type), with a area behind the modules for clamping, fan-out of cables and management of fiber and with a coiling area for patchcords overlength management .

Depending on the need, the range is available in various heights up to 1600mm (with plinth of 200mm included), a standard depth of 350 mm and a width of 750mm (1 door) or 1500mm (2 doors). Specific sizes are available on demand.

Main characteristics

- Material : steel (Aluzinc) or aluminium* painted
- Color : Standard light grey RAL 7035, option with full choice of paint with anti-graffiti effect
- Protection : IP55/IK10, with operating temperature from -40 to +65°C (category A)
- Door(s) : 120° opening, handle with locking system 3 points and lock (triangle 8mm)
- Fixing : On concrete slab with screws (not provided) or by using fixing frame

* Option with anti-sticking bumps available with aluminium.

STANDARDS

IEC 61753-1

All drawings, designs, specifications, plans and particulars of weights, size and dimensions contained in the technical or commercial documentation of Aginode is indicative only and shall not be binding on Aginode or be treated as constituting a representation on the part of Aginode.

These cabinets comply with current regulations and are EC certified.

Cabling

Fiber optic cables entry is performed by the plinth. Cables clamping and fanout is also made in lower part on each cabinet. Management of tubes or cables to modules is made on the bottom plate of the rack behind the modules.

Fixing

Cabinet is fixed on concrete slab with screws (not provided) or with fixing frame.

Single skin cabinet single door standard composition

- A plinth height 200mm
- A removable roof from inside to access to lifting eyes
- A 19'' rack on the right position
- A coiling area for patchcords overlength management on left position
- A fixing plate for clamping or fanout systems
- A bottom plate allowing management of tubes and cables behind the optical modules with rings (provided)
- A hatch to access into the plinth
- A door with automatic holding system (right 120° opening)
- Openable side panels from inside
- A 3 points locking system with lock triangle 8mm
- A fixing kit for optical modules (50 cage nuts with screws and washers)

This composition can be modified depending of the expected configuration.

Single skin cabinet double doors standard composition

- A plinth height 200mm
- A removable roof from inside to access to lifting eyes
- 2 19'' racks on right and left positions
- A coiling area for patchcords overlength management in the middle
- A fixing plate for clamping or fanout systems for each rack
- A bottom plate allowing management of tubes and cables behind the optical modules with rings (provided) for each rack

All drawings, designs, specifications, plans and particulars of weights, size and dimensions contained in the technical or commercial documentation of Aginode is indicative only and shall not be binding on Aginode or be treated as constituting a representation on the part of Aginode.

- A hatch to access into the plinth for each rack
- 2 doors with automatic holding system (right 120° opening)
- Openable side panels from inside
- A 3 points locking system with lock triangle 8mm
- A fixing kit for optical modules (50 cage nuts with screws and washers)

This composition can be modified depending of the expected configuration.

Single skin cabinet double doors

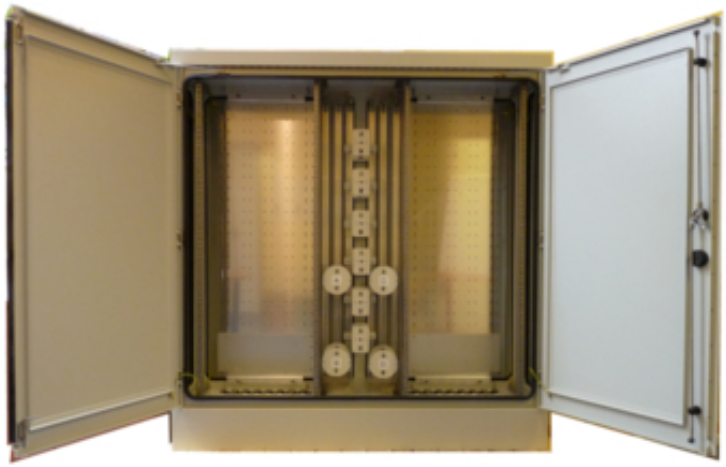

Accessory: Fixing frame

Aginode references

- **10238417** for cabinet base 750x350
- **10235652** for cabinet base 1500x350
- **10236502** for cabinet base 810x410
- **10238221** for cabinet base 1560x410
- **10234981** for cabinet base 1960x710

Fixing frame to be sealed into concrete slab to fix a metal cabinet (4 points)

All drawings, designs, specifications, plans and particulars of weights, size and dimensions contained in the technical or commercial documentation of Aginode is indicative only and shall not be binding on Aginode or be treated as constituting a representation on the part of Aginode.

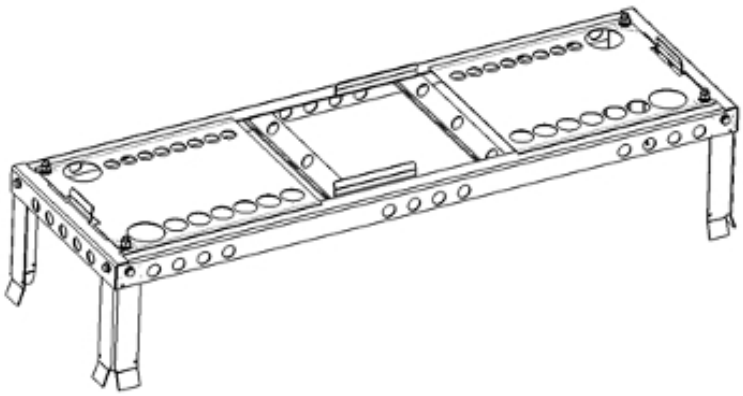

Fixing frame to be sealed into concrete slab to fix a metal cabinet (6 points)

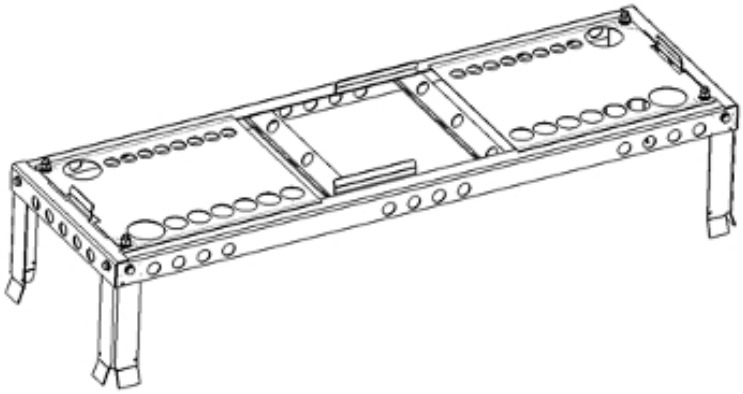

Option: Anti-graffiti paint

Anti-graffiti paint means paint with some resistance to solvents to help cleaning of graffiti.

Cleaning process

Cleaning must be done as quick as possible because if impregnation of graffiti is too long, it should be not completely removed. Chosen cleaning agent must be tested on a small surface preferably not visible. Cleaning must be made with soft cloth in a short time and surface must be finally rinse with water.

Cleaning agents**

Recommanded by manufacturer : P SCRIBEX 500 (Henkel), ARCANE US 226 (Arcaneige2:Gj2ndustries), SOCOSTRIP T4210P (Socomore), other usable commercial products : 90 ° alcohol, white spirit, acetone.

All drawings, designs, specifications, plans and particulars of weights, size and dimensions contained in the technical or commercial documentation of Aginode is indicative only and shall not be binding on Aginode or be treated as constituting a representation on the part of Aginode.

** It is essential to read the precautions for use of agents before use.

Option - Anti-sticking bumps



All drawings, designs, specifications, plans and particulars of weights, size and dimensions contained in the technical or commercial documentation of Aginode is indicative only and shall not be binding on Aginode or be treated as constituting a representation on the part of Aginode.

PME SP Aluminium Cabinet 19'' 22U 1350x750x350

Eigenschaften

Konstruktionsmerkmale	
Fasertyp	SM (G.652D)
Schaltschrankformat	19"
Werkstoff	Aluminium
Abmessungsmerkmale	
Tiefe	350 mm
Höhe	1350 mm
Breite	750 mm
Mechanische Eigenschaften	
IK-Bewertung	10
Anwendungsmerkmale	
Einsatzbereich	Innen- und Ausseninstallationen
Betriebstemperatur	-40...65 °C
Locking system	Triangle
UV Beständigkeit	Ja
Watertightness	IP 55

Dokumentation

Patching Drawing for double rack configuration C — 902.57 KB Herunterladen

Patching Drawing for single rack configuration pdf — 599.51 KB Herunterladen

Verkauf & Lieferung Informationen

Packaging : Unit on palet

All drawings, designs, specifications, plans and particulars of weights, size and dimensions contained in the technical or commercial documentation of Aginode is indicative only and shall not be binding on Aginode or be treated as constituting a representation on the part of Aginode.